OfficestoGo

Assembly Instructions
MODEL NO.: SL7136CEL

Credenza w/Corner ext. /Left

LO2/08-22

CONC10	CONC11	DOWEL	GLIDE	TUN013LB	TUN018SC	TUN015BG	FLAT BRACKET	PLASTIC CAP	PLASTIC CAP
A	B	C	D	E	F	G	H	I	J
									
Cam Lock Pin 18Pcs+2Pcs	Cam Lock 18Pcs+2Pcs	Dowel 12Pcs+2Pcs	Glide 5Pcs	L-Bracket 4Pcs	Screw #4*⅝" 42Pcs+3Pcs	Grommet 1Pcs	Flat Bracket 2Pcs	DEEP CAMLOCK CAP 10Pcs+1Pcs	CAMLOCK CAP 8Pcs+1Pcs

STEP1

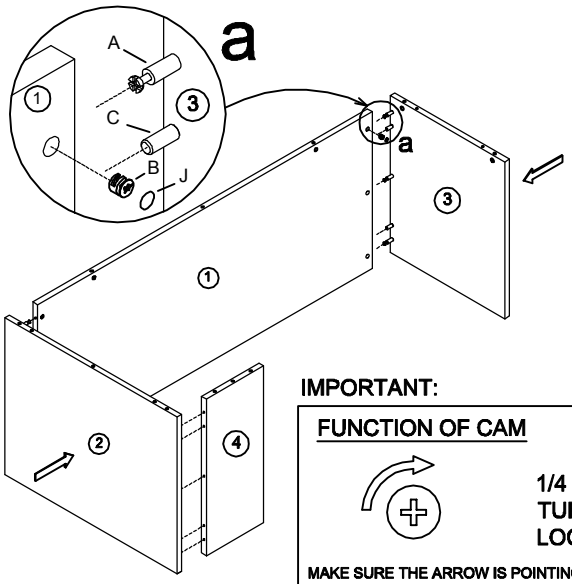

IMPORTANT:

FUNCTION OF CAM

1/4 RIGHT TURN FOR LOCKING

MAKE SURE THE ARROW IS POINTING UPWARDS BEFORE INSERTING INTO THE PANEL'S HOLE.

STEP2

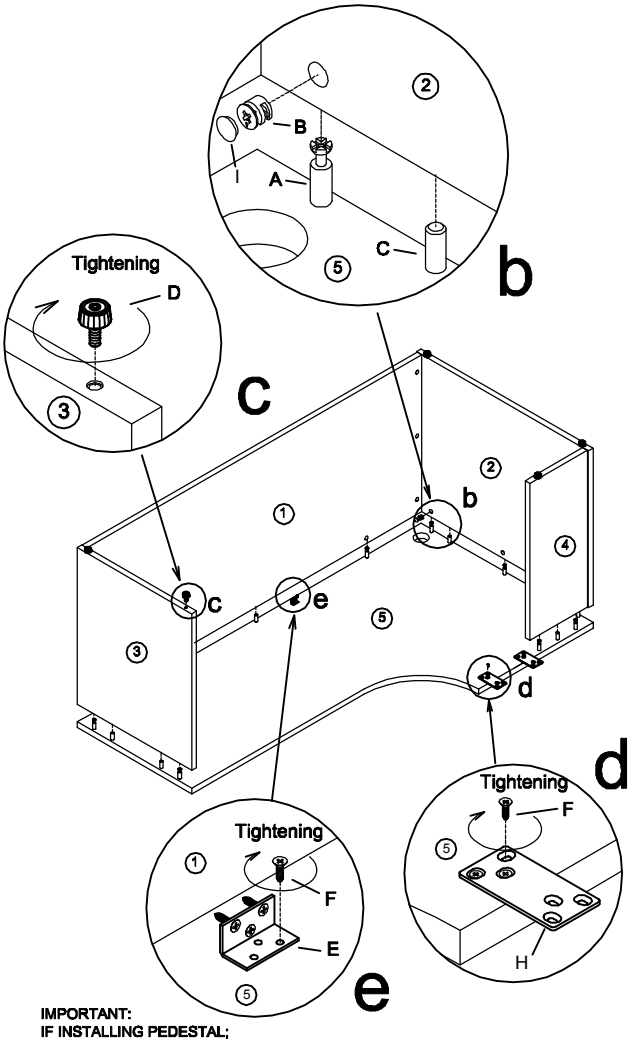

IMPORTANT:
IF INSTALLING PEDESTAL;
BRACKETS ON END NOT REQUIRED.

STEP3

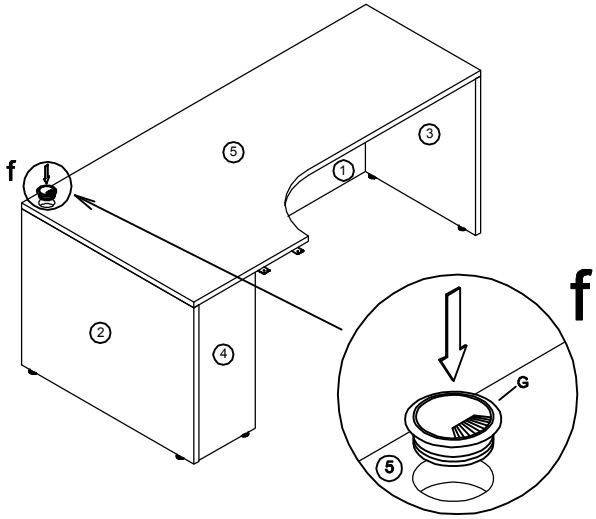

IMPORTANT NOTE:

·It is advisable to assemble unit on a carpet to avoid scratch.
·Check to be sure that you have all parts and hardware.
·Don't tighten all screws/bolts until all completely assembled.
·It is recommended to require 2 persons to complete the assembling.